Two Bolt Flange Unit Set Screw Lock

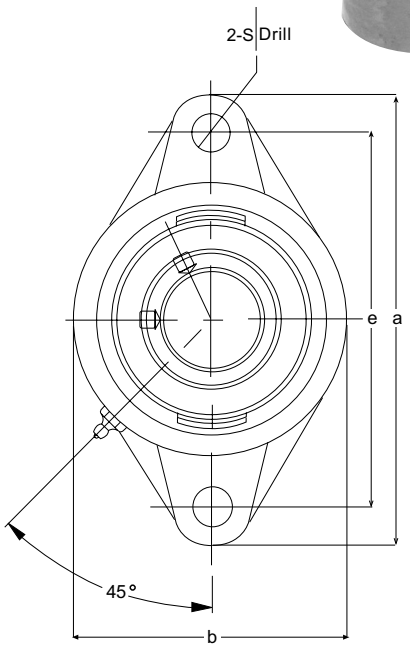

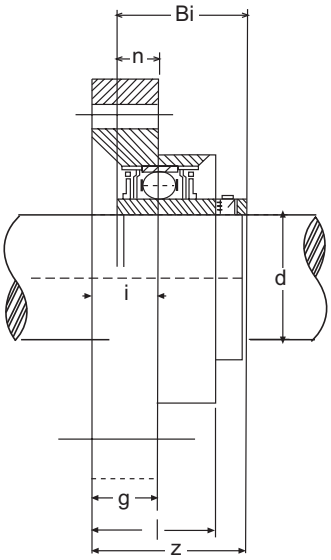

Part Number	Shaft Diameter (d)		Dimensions (in) or (mm)										Bolt Used		Weight Lbs.
	(in.)	(mm)	a	e	i	g	l	s	b	z	Bi	n	(in.)	(mm)	
UCFLW 201-08	1/2		4 13/32	3	43/64	7/16	31/32	25/64	2 3/8	1 5/16	1.0236	.3937	5/16		.9
UCFLW 202-10	5/8														
UCFL 201		12													
UCFL 202		15	113	90	15	11	25.5	12	60	33.3	31	12.7		M10	
UCFL 203		17													
UCFL 204		20													
UCFL 201-08	1/2														1.04
UCFL 202-09	9/16												3/8		
UCFL 202-10	5/8														
UCFL 203-11	11/16		4 29/64	3 35/64	19/32	7/16	1	15/32	2 23/64	1 5/16	1.2205	0.5000			
UCFL 204-12	3/4														
UCFL 205		25	130	99	16	13	27	16	68	35.8	34.1	14.3		M14	
UCFL 205-14	7/8														1.39
UCFL 205-15	15/16		5 1/8	3 57/64	5/8	33/64	1 1/16	5/8	2 43/64	1 13/32	1.3425	0.5630	1/2		
UCFL 205-16	1														
UCFL 206		30	148	117	18	13	31	16	80	40.2	38.1	15.9		M14	
UCFL 206-18	1 1/8		5 53/64	4 39/64	45/64	33/64	1 7/32	5/8	3 5/32	1 37/64	1.5000	0.6260	1/2		1.87
UCFL 206-19	1 3/16														
UCFL 207		35	161	130	19	16	34	16	90	44.4	42.9	17.5		M14	
UCFL 207-20	1 1/4														
UCFL 207-21	1 5/16												1/2		2.64
UCFL 207-22	1 3/8		6 11/32	5 1/8	3/4	5/8	1 11/32	5/8	3 35/64	1 3/4	1.6890	0.6890			
UCFL 207-23	1 7/16														
UCFL 208		40	175	144	21	16	36	16	100	51.2	49.2	19		M14	
UCFL 208-24	1 1/2		6 57/64	5 43/64	53/64	5/8	1 27/64	5/8	3 15/16	2 1/64	1.9370	0.7480	1/2		3.52
UCFL 208-25	1 9/16														
UCFL 209		45	188	148	22	16	38	19	108	52.2	49.2	19		M14	
UCFL 209-26	1 5/8														
UCFL 209-27	1 11/16		7 13/32	5 53/64	55/64	5/8	1 1/2	3/4	4 1/4	2 1/16	1.9370	0.7480	1/2		4.18
UCFL 209-28	1 3/4														
UCFL 210		50	197	157	22	16	40	19	115	54.6	51.6	19		M16	
UCFL 210-30	1 7/8		7 3/4	6 3/16	55/64	5/8	1 37/64	3/4	4 17/32	2 5/32	2.0135	0.7480	1/2		5.06
UCFL 210-31	1 15/16														
UCFL 211		55	224	184	25	18	43	19	130	58.4	55.6	22.2		M16	
UCFL 211-32	1														
UCFL 211-34	2 1/8		8 13/16	7 1/4	63/64	45/64	1 11/16	3/4	5 1/8	2 19/64	2.1890	0.8740	5/8		7.26
UCFL 211-35	2 3/16														

Dimensional data is for reference only. EBC assumes no liability with respect to errors or omissions.

Chart Continued on 4-5

Two Bolt Flange Unit Set Screw Lock

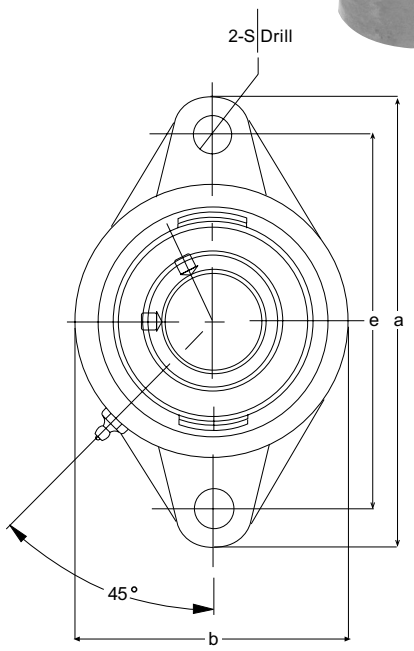

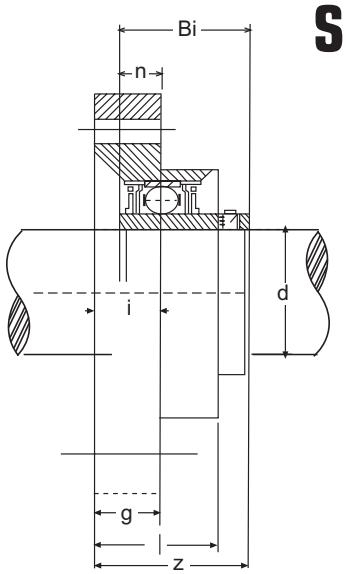

Chart Continued from 4-4

Part Number	Shaft Diameter (d)		Dimensions (in) or (mm)										Bolt Used		Weight Lbs.
	(in.)	(mm)	a	e	i	g	l	s	b	z	Bi	n	(in.)	(mm)	
UCFL 212		60	250	202	29	18	48	23	140	68.7	65.1	25.4		M16	
UCFL 212-36	2 1/4														
UCFL 212-38	2 3/8		9 27/32	7 61/64	1 9/64	45/64	1 57/64	29/32	5 33/64	2 45/64	2.5630	1.000	5/8		9.46
UCFL 212-39	2 7/16														
UCFL 213		65	258	210	30	20	50	23	155	69.7	65.1	25.4		M20	11.44
UCFL 213-40	2 1/2		10 5/32	8 17/64	1 3/16	25/32	1 31/32	29/32	6 7/64	2 3/4	2.5630	1.000	3/4		
UCFL 214		70	265	216	31	20	54	23	160	75.4	74.6	30.2		M20	12.54
UCFL 214-44	2 3/4		10 7/16	8 1/2	1 7/32	25/32	2 1/8	29/32	6 19/64	2 31/32	2.9370	1.1890	3/4		
UCFL 215		75	275	225	34	20	56	23	165	78.5	77.8	33.3		M20	14.08
UCFL 215-48	3		10 53/64	8 55/64	1 11/32	25/32	2 13/64	29/32	6 1/2	3 3/32	3.0630	1.3110	3/4		
UCFL 216		80	290	233	34	20	58	25	180	83.3	82.6	33.3		M22	18.35
UCFL 216-50	3 1/8		11 27/64	9 11/64	1 11/32	25/32	2 9/32	63/64	7 3/32	3 9/32	3.2520	1.3110	7/8		
UCFL 217		85	305	248	36	22	63	25	190	87.6	85.7	34.1		M22	21.56
UCFL 217-52	3 1/4		12	9 49/64	1 27/64	7/8	2 31/64	63/64	7 31/64	3 29/64	3.3740	1.3425	7/8		
UCFL 218		90	320	265	40	23	68	25	205	96.3	96	39.7		M22	26.62
UCFL 218-56	3 1/2		12 19/32	10 7/16	1 37/64	29/32	2 43/64	63/64	8 5/64	3 51/64	3.7795	1.5630	7/8		

Dimensional data is for reference only. EBC assumes no liability with respect to errors or omissions.